PoWer Plus Series

GeKaMac®

Power Plus MIG 200
Users Manual

Please Read and Understand This Manual
Before Operating The Welding Machine

www.gedikkaynak.com.tr

GeKaMac®

PoWer Plus MIG 200

OPERATORS' MANUAL

This machine is for internal use only.

It complies with the WEEE Directive.

This machine has been designed in accordance with the EN 60974-1 and EN 60974-10 standards.

The machine is safe when installation, operation, and maintenance are performed in accordance with the user manual and regulations. The operator and machine owner are responsible for adhering to safety rules.

Gedik Kaynak San. Ve Tic. A.Ş. assumes no responsibility for safety or CE compliance if any modifications are made to the machine or if safety rules are not followed.

This Class A equipment is not suitable for use in homes and similar residential areas where the power supply is provided by the low-voltage public electricity network.

This machine is not household waste and cannot be disposed of in the trash.

When the machine reaches the end of its service life or becomes obsolete, it must be disposed of in accordance with regulations.

COMPLIES WITH THE WEEE DIRECTIVE.

Eco Design Statement

This machine has been designed and manufactured in accordance with the requirements of the 2009/125/EC Eco Design Directive concerning the environmentally friendly design of energy-related products.

Accordingly, machines with an idle mode are as follows.

	Idle Mode
MMA	**X**
MIG	√
TIG	√
Plazma	√
SAW	**Out of Scope**

Efficiency measurements should be conducted only on the power unit. The water cooling system should be disabled. For more information on measurements and machine settings, Gedik Kaynak Sanayi ve Ticaret A.Ş. should be consulted.

Gedik since 1963

AT UYGUNLUK BEYANI

EU DECLARATION OF CONFORMITY

Bu uygunluk beyanı yalnızca imalatçının sorumluluğu altında düzenlenir.

This declaration of conformity is issued under the sole responsibility of the manufacturer.

İstanbul, Turkey, 08.03.2024

İmalatçı / Manufacturer

GEDİK KAYNAK SANAYİ ve TİCARET A.Ş.

Ankara Cad. No.306 Seyhli Pendik ISTANBUL TURKIYE

Ürün / Product	ARC WELDING MACHINE
Marka-Model / Brand- Model	PoWerPlus MIG 200

Yukarıda tanımlanan beyanın nesnesi ilgili uyumlaştırılmış AB mevzuatı ile uyumludur.

The object of the declaration described above, is in conformity with the relevant union harmonisation legislation.

Direktifler / Directives 2014/30/EU & 2014/35/EU & 2009/125/EC

Uyumlaştırılmış standartlar ve uygunluğun deklare edilmesiyle ilişkili diğer referanslar.

References to the relevant harmonised standarts used and references to the other technical specifications in relation to which conformity is declared.

EN IEC 60974-1:2018+A1:2019
EN IEC 60974-10:2021

Bu ekipman, talimatlara uygun kurulduğunda, bakımı yapıldığında ve kullanıldığında belirtilen standartlara uygundur. Makine üzerinde bir değişiklik yapıldığında veya yanlış kullanımda deklarasyon geçersiz olur.

The equipment is in compliance with pertinent legislation when installed, utilized, and maintained in accordance with the enclosed instructions. This declaration will be invalid under any modification or improper use.

İmalatçı Adına imzalayan / Signed for and on behalf of:

Hatice Özel, Equipment Business Unit Director

IMPORTANT: **Read this Owner's Manual Completely** before attempting to use this equipment. Save this manual and keep it handy for quick reference. Pay particular attention to the safety instructions we have provided for your protection. Contact your distributor if you do not fully understand this manual.

CONTENT

§ 1 Safety 1

§1.1 Signal Explanation 1

§1.2 Arc Welding Damage 1

§1.3 The knowledge of Electric and Magnetic Fields 5

§2 Overview 7

§2.1 Brief Introduction 7

§2.2 Working Principle 8

§2.3 Volt-Ampere Characteristic 8

§3 Installation and Adjustment 10

§3.1 Parameters 10

§3.2 Duty cycle and Over-heat 10

§3.3 Equipment Connection 11

§3.4 Maintenance of MIG Gun mechanism 12

§3.5 Maintenance of the wire feed mechanism 14

§4 Operation 15

§4.1 Layout for the front and rear panel 15

§4.2 Welding operation 17

§4.2.1 Voltage Setting 17

§4.2.2 Wire speed setting 17

§4.3 Welding parameters 17

§4.4 Operation environment 17

§4.5 Operation Notices 18

§5 Maintenance & Troubleshooting 19

§5.1 Maintenance 19

§5.2 Troubleshooting 20

§5.3 Electrical schematic drawing 22

§ 1 Safety

§1.1 Signal Explanation

• The above signals mean warning! Notice! Running parts and getting an electric shock or thermal parts will take damage for your body or others. The corresponding notices are as follows. It is quite a safe operation after taking several necessary protection measures.

§1.2 Arc Welding Damage

• The following signals and word explanations are to some damages for your body or others happening on the welding operation. While seeing these, please remind of yourself or others to be dangerous.

• Only ones who are trained professionally can install, debug, operate, maintain and repair the equipment.

• During the operation, non-concerned people should be lift, especially for children.

• After shut off the machine power, please maintain and examine the equipment according to §5 because of the DC voltage existing in the electrolytic capacitors.

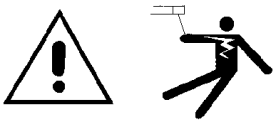

ELECTRIC SHOCK CAN KILL.

• Never touch electrical parts.

• Wear dry, hole-free gloves and clothes to insulate yourself.

• Insulate yourself from work and ground using dry insulation. Make certain the insulation is large enough to cover your full area of physical contact with work and ground.

• Take carefully when using the equipment in small place, falling-off and wet circumstance.

• Never close the machine power before installation and adjustment.

Ensure to install the equipment correctly and ground the work or metal to be welded to a good electrical (earth) ground according the operation manual.

- The electrode and work (or ground) circuits are electrically “hot” when the welder is on. Do not touch these “hot” parts with your bare skin or wet clothing. Wear dry, hole-free gloves to insulate hands.
- In semiautomatic or automatic wire welding, the electrode, electrode reel, welding head, nozzle or semiautomatic welding gun are also electrically “hot”.
- Always be sure the work cable makes a good electrical connection with the metal being welded. The connection should be as close as possible to the area being welded.
- Maintain the electrode holder, work clamp, welding cable and welding machine in good, safe operating condition. Replace damaged insulation.
- Never dip the electrode in water for cooling.
- Never simultaneously touch electrically “hot” parts of electrode holders connected to two welders because voltage between the two can be the total of the open circuit voltage of both welders.
- When working above the floor level, use a safety belt to protect yourself from a fall should you get a shock.

FUMES AND GASES CAN BE DANGEROUS.

- Welding may produce fumes and gases hazardous to health. Avoid breathing these fumes and gases. When welding, keep your head out of the fume. Use enough ventilation and/or exhaust at the arc to keep fumes and gases away from the breathing zone. When welding with electrodes which require special ventilation such as stainless or hard facing or on lead or cadmium plated steel and other metals or coatings which produce highly toxic fumes, keep exposure as low as possible and below Threshold Limit Values using local exhaust or mechanical ventilation. In confined spaces or in some circumstances, outdoors, a respirator may be required. Additional precautions are also required when welding on galvanized steel.
- Do not weld in locations near chlorinated hydrocarbon vapors coming from

degreasing, cleaning or spraying operations. The heat and rays of the arc can react with solvent vapors to form phosgene, a highly toxic gas, and other irritating products.

- Shielded gases used for arc welding can displace air and cause injury or death. Always use enough ventilation, especially in confined areas, to insure breathing air is safe.
- Read and understand the manufacturer's instructions for this equipment and the consumables to be used, including the material safety data sheet and follow your employer's safety practices.

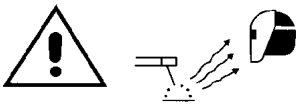

ARC RAYS CAN BURN.

- Use a shield with the proper filter and cover plates to protect your eyes from sparks and the rays of the arc when welding or observing open arc welding.
- Use suitable clothing made from durable flame-resistant material to protect your skin and that of your helpers from the arc rays.
- Protect other nearby personnel with suitable, non-flammable screening and /or warn them not to watch the arc nor expose themselves to the arc rays or to hot spatter or metal.

SELF-PROTECTION

- Keep all equipment safety guards, covers and devices in position and in good repair. Keep hands, hair, clothing and tools away from V-belts, gears, fans and all other moving parts when starting, operating or repairing equipment.
- Do not put your hands near the engine fan. Do not attempt to override the governor or idler by pushing on the throttle control rods while the engine is running.

DO NOT adds the fuel near an open flame welding arc or when the engine is running. Stop the engine and allow it to cool before refueling to prevent spilled fuel from vaporizing on contact with hot engine parts and igniting.

Do not spill fuel when filling tank. If fuel is spilled, wipe it up and do not start engine until fumes have been eliminated.

WELDING SPARKS can cause fire or explosion.

- Remove fire hazards from the welding area. If this is not possible, cover them to prevent the welding sparks from starting a fire. Remember that welding sparks and hot materials from welding can easily go through small cracks and openings to adjacent areas. Avoid welding near hydraulic lines. Have a fire extinguisher readily available.
- Where compressed gases are to be used at the job site, special precautions should be used to prevent hazardous situation.
- When not welding, make certain no part of the electrode circuit is touching the work or ground. Accidental contact can cause overheating and create a fire hazard.
- Do not heat, cut or weld tanks, drums or containers until the proper steps have been taken to insure that such procedures will not cause flammable or toxic vapors from substances inside. They can cause an explosion even though they have been “cleaned”.
- Vent hollow castings or containers before heating, cutting or welding. They may explode.
- Sparks and spatter are thrown from the welding arc. Wear oil free protective garments such as leather gloves, heavy shirt, cuff less trousers, high shoes and a cap over your hair. Wear ear plugs when welding out of position or in confined places. Always wear safety glasses with side shields when in a welding area.
- Connect the work cable to the work as close to the welding area as practical. Work cables connected to the building framework or other locations away from the welding area increase the possibility of the welding current passing through lifting chains, crane cables or other alternate circuits. This can create fire hazards or overheat lifting chains or cables until they fail.

Rotating parts may be dangerous.

- Use only compressed gas cylinders containing the correct shielding gas for the process used and properly operating regulators designed for the gas and pressure used. All hoses, fittings, etc. should be suitable for the application and maintained in good condition.
- Always keep cylinders in an upright position securely chained to an undercarriage or fixed support.
- Cylinders should be located:
  - Away from areas where they may be struck or subjected to physical damage.
  - A safe distance from arc welding or cutting operations and any other source of heat, sparks, or flame.
- Never allow the electrode, electrode holder or any other electrically “hot” parts to touch a cylinder.
- Keep your head and face away from the cylinder valve outlet when opening the cylinder valve.
- Valve protection caps should always be in place and hand tight except when the cylinder is in use or connected for use.

§1.3 The knowledge of Electric and Magnetic Fields

Electric current flowing through any conductor causes localized Electric and Magnetic Fields (EMF). The discussion on the effect of EMF is ongoing all the world. Up to now, no material evidences show that EMF may have effects on health. However, the research on damage of EMF is still ongoing. Before any conclusion, we should minimize exposure to EMF as few as possible.

In order to minimize EMF, we should use the following procedures:

- Route the electrode and work cables together – Secure them with tape when possible.
- All cables should be put away and far from the operator.

- Never coil the power cable around your body.
- Make sure welding machine and power cable to be far away from the operator as far as possible according to the actual circumstance.
- Connect the work cable to the workpiece as close as possible to the area being welded.
- The people with heart-pacemaker should be away from the welding area.

§2 Overview

§2.1 Brief Introduction

MIG SERIES arc welding machine adopts the latest pulse width modulation (PWM) technology and insulated gate bipolar transistor (IGBT) power module, which can change work frequency to medium frequency so as to replace the traditional hulking work frequency transformer with the cabinet medium frequency transformer. Thus, it is characterized with portable, small size, light weight, low consumption and etc.

MIG SERIES arc welding machine uses Mix gas as shielded gas to realize gas shielded welding, active gas（$Ar+O_2$、$Ar+CO_2$） as shielded gas to realize MAG welding and inactive gas（Ar）as shielded gas to realize MIG welding.

MIG SERIES arc welding machine has automatic protection functions with intelligent to over-voltage, over-current and over-heat. If any one of the above problems happens, the alarm lamp on the front panel will be lighted and output current will be shut off automatically to protect itself and prolong the equipment using life.

MIG SERIES Features:

1. Digital control system, real-time display the welding parameters;
2. High performance multifunction power source (MIG/MAG);
3. Waveform control, stable welding arc;
4. IGBT technology, low power dissipation;
5. Rated duty circle：MIG 140 is 30%(40℃).MIG 160 is 40%(40℃).POWERPLUS MIG 200 is 30%(40℃)

MIG SERIES arc welding machine is suitable for all positions welding for various plates made of stainless steel, carbon steel, alloyed steel etc, which is also applied to pipe installment, mould mend, petrochemical, architecture decoration, car repair, bicycle, handicraft and common manufacture.

MAG--Metal Active Gas Welding

MIG--Metal Insert Gas Welding

§2.2 Working Principle

The working principle of MIG SERIES arc welding machine is shown as the following figure. single-phase 220V work frequency AC is rectified into DC（312V）, then is converted to medium frequency AC (about 40KHz) by inverter device (IGBT), after reducing voltage by medium transformer (the main transformer) and rectifying by medium frequency rectifier (fast recovery diodes), and is outputted by inductance filtering. when MIG. Meanwhile, the welding current parameter can be adjusted continuously and infinitely to meet with the requirements of welding craft.

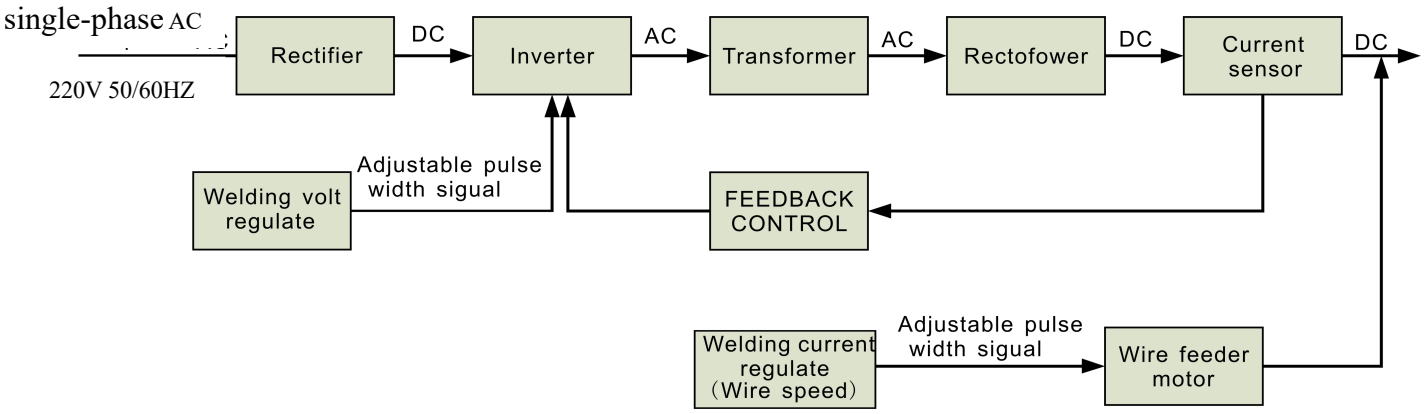

§2.3 Volt-Ampere Characteristic

MIG SERIES welding machine has an excellent volt-ampere characteristic, whose graph is shown as the following figure. The relation between the rated loading voltage U_2 and welding current I_2 is as follows: $U_2=14+0.05I_2$(V)

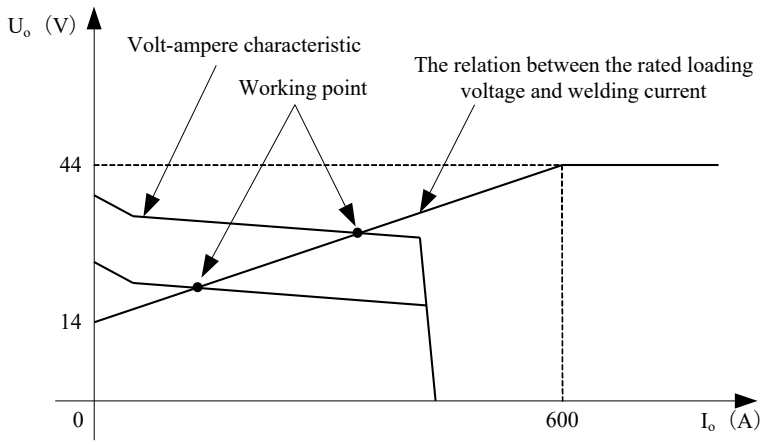

§2.4Principles of welding

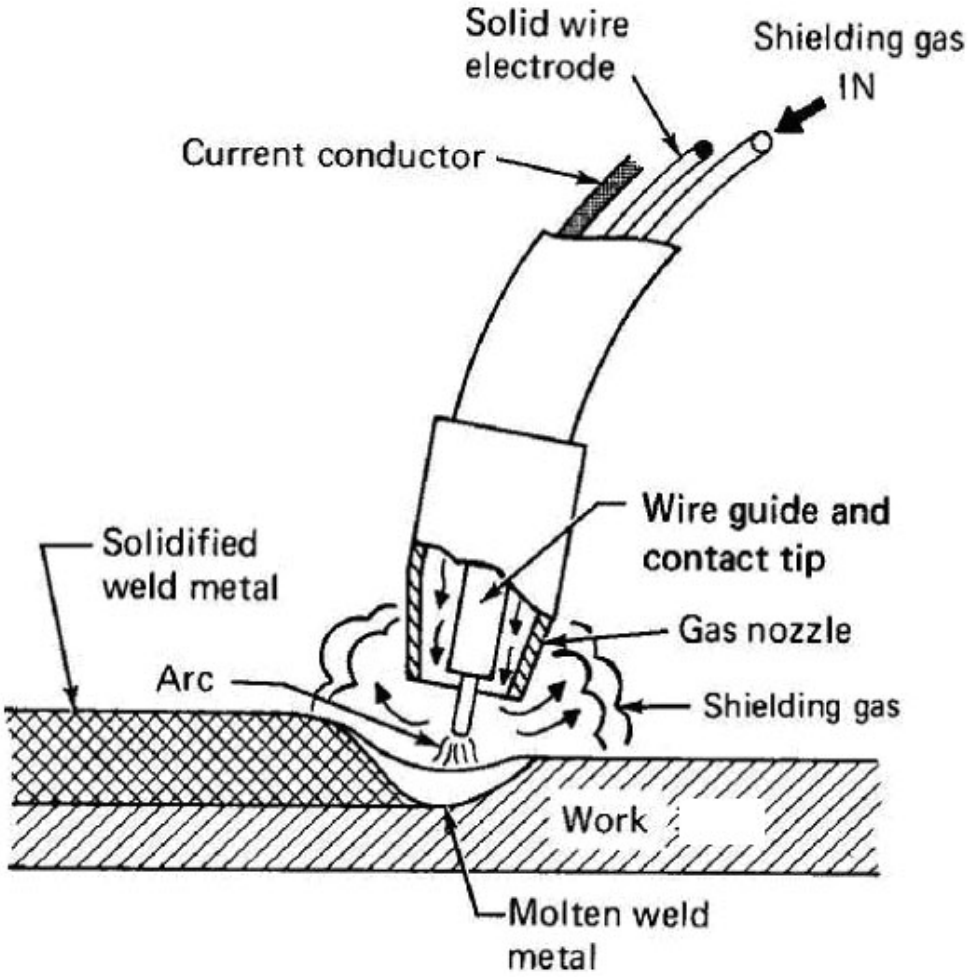

§3 Installation and Adjustment

§3.1 Parameters

Model / Parameters	PoWer Plus POWERPLUS MIG 200
Input Voltage（V）	1~220/230/240±10%
Input Current（A）	40
Input Power（KW）	5.6
Welding Current（A）	40-200
No-load Voltage（V）	66,2
Duty cycle（40℃）	30%200A 60%145A 100%110A
Welding Current Range (A)	40-200
Welding Voltage Range (V)	12-24
Diameter(mm)	0.6、0.8、0.9、1.0 (Fe /Ss/Flux-Cored)
Protection class	IP21S
Dimensions（mm）	471*213*400
Weight（Kg）	12

Note: The above parameters are subject to change with the improvement of machines.

§3.2 Duty cycle and Over-heat

The letter “X” stands for the duty cycle, which is defined as the proportion of the time that a machine can work continuously within a certain time (10 minutes). The rated duty cycle means the proportion of the time that a machine can work continuously within 10 minutes when it outputs the rated welding current.

The relation between the duty cycle “X” and the output welding current “I” is shown as the right figure.

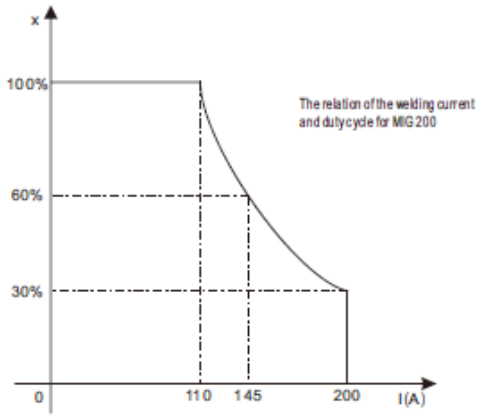

If transformer is over-heat, the heat relay inside it will open and will output an instruction to circuit board, cut AC relay and the output welding current, and brighten the over-heat pilot lamp

in the front panel. At this time, the machine should be relaxed for 15 minutes to cool the fan. When operating the machine again, the welding output current or the duty cycle should be reduced.

§3.3 Equipment Connection

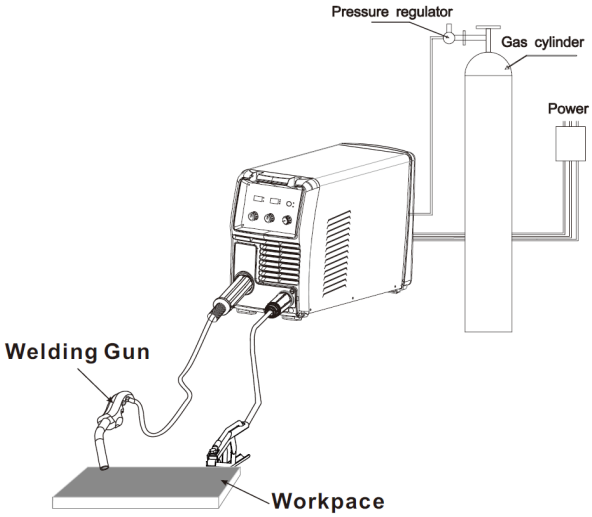

Operation Steps：

1、Connect the power source input cable of welding machine with the output port of air switch in electric box on the spot.

2、Connect the cable plug of wire feeder to the positive output of welding machine.

3、Connect the control cable plug of wire feeder to the aero socket on the front board of welding machine.

4、Connect the negative pole of welding machine to the work piece (base metal).

5、Connect the output pipe of gas cylinder to the input joint of gas valve on the wire feeder and clamp it.

6、Insert the torch joint into the output of wire feeder unit and keep the wire aim at the wire feeder mouth.

Note: The plane of the joint should be aimed at screw, plugged tightly and rotated 90º, then screw the bolt tightly to ensure the gun contacting closely.

7、Connect the shielded gas pipe of torch with the output of front panel on wire feeder.

8、Connect the control cable pin of torch with the two-lead aero socket of front panel on wire feeder.

9、Notice that the wire diameter should be accordant with the wire wheel and torch tip and press the wire properly with the hand

§ 3.4 Maintenance of MIG Gun mechanism

§3.4.1 Dissection graphics for the MIG GUN

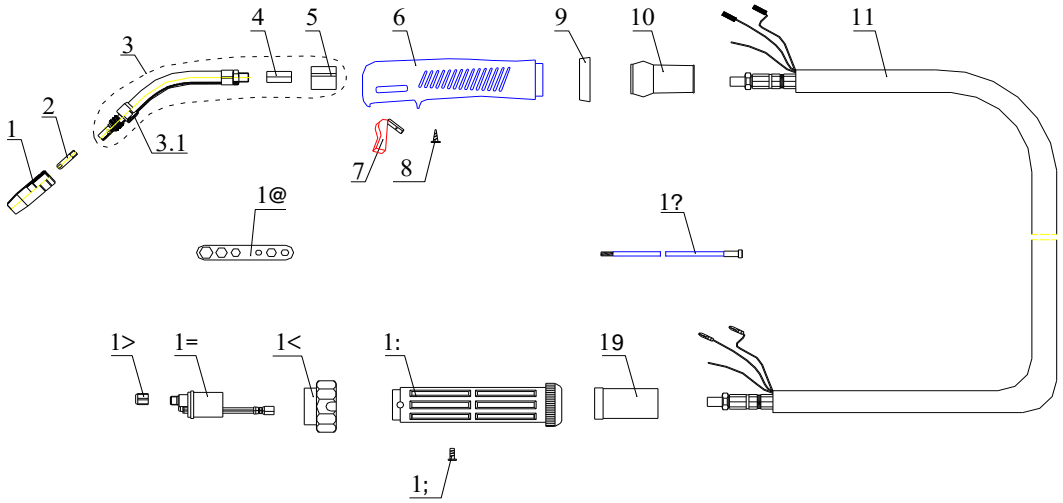

§3.4.2 The parts list for the MIG GUN

NO.	Description	QTY.	Remark
1	Tip D.12 14-15AK	1	
2	Electric nozzle 0.8/M6*25	1	
3	15AK Goose gun neck（Hexangular adapter and Plastic adapter）	1	
3.1	15AK Goose gun	1	
4	Hexangular adapter	1	
5	Plastic adapter	1	
6	MIG blue handle	1	
7	Torch Switch 21.8mm	1	
8	Screw D.3*10	3	
9	Handle locking ring	1	
10	Cable fixing joint 15AK	1	
11	Coaxial cable team /16mmq/3m	1	
12	Cable thimble 12-16-25 MMQ	1	
13	CO_2 Euro-rear thimble	1	
14	Screw M4*6 UNI 6107	1	
15	Torch locknut /plastic screw thread	1	
16	Euro-main socket/flexibility pin	1	
17	Feeding pipe locknut	1	
18	Insulating feed pipe 0.6-0.8 3m, Blue	1	
19	Spanner for the electric nozzle	1	

§3.4.3 The operation for the MIG GUN

1. Service the wire feed mechanism at least every time the reel is changed.

• Check the wear of the feed roll groove and change the feed roll when necessary.

• Clean the welding gun wire guide with compressed air.

2. Cleaning the wire guide

Pressure of the feed rolls remove metal dust from the filler wire's surface which then finds its way to the wire guide. If the wire guide is not cleaned, it gradually clogs up and causes wire feed malfunctions. Clean the wire guide in the following manner：

Remove the welding gun's gas nozzle, contact tip and contact tip's adapter.

With a pneumatic pistol, below compressed air through the wire guide.

Blow the wire feed mechanism and reel housing clean with compressed air.

Reattach the welding gun's parts. Tighten the contact tip and contact tip's adapter to spanner tightness.

3. Changing the wire guide

If the wire guide is too worn or totally clogged, change it to a new one according to the following instructions.

Open the mounting nut of the wire guide which exposes the end of the wire guide.

Straighten the welding gun's cable and withdraw the wire guide from the gun.

Push a new wire guide in to the gun. Make sure that the wire guide enters all the way into the contact tip's adapter and that there is an O-ring at the machine-end of the guide.

Tighten the wire guide in place with the mounting nut.

Cut the wire guide 2mm from the mounting nut and file the sharp edges of the cut round.

Reattach the gun in place and tighten the parts to spanner tightness.

§3.5 Maintenance of the wire feed mechanism

Changing the feed roll groove

The feed roller (No.9 in the picture) is factory set for welding filler wires of 08-1.0mm and 0.6mm diameter on the other side. The feed roller side must be changed if you use 0.6mm thick filler wire.

Threading the filler wire

Threading the filler wire as the follow steps:

Open the reel housing by pressing on the opening button and install the wire reel in such a way that it rotates counter clockwise. You can use either a diameter 200mm or 100mm wire reel in the machine.

Attach the reel with a reel lock.

Unfasten the wire end from the reel, but hold on it all the time.

Straighten the wire end for approximately 20 cm and cut the wire in the straightened location.

Open the pressure control level which then opens the feed gear.

Thread the wire through the wire's rear guide to the gun's wire guide.

Close the feed gear and fasten it with the pressure control lever. Make sure that the wire runs in the feed roll groove.

Adjust the compression pressure with the pressure control lever no higher than to the middle of the scale. If the pressure is too high, it removes metal fragments from the wire surface and may damage the wire. On the other hand, if the pressure is too low, the feed gear slips and the wire does not run smoothly.

Press the welding gun trigger and wait for the wire to come out.

Close the reel housing cover.

Note：When driving the wire into the gun, do not point the gun at yourself or others.

§4 Operation

§4.1 Layout for the front and rear panel

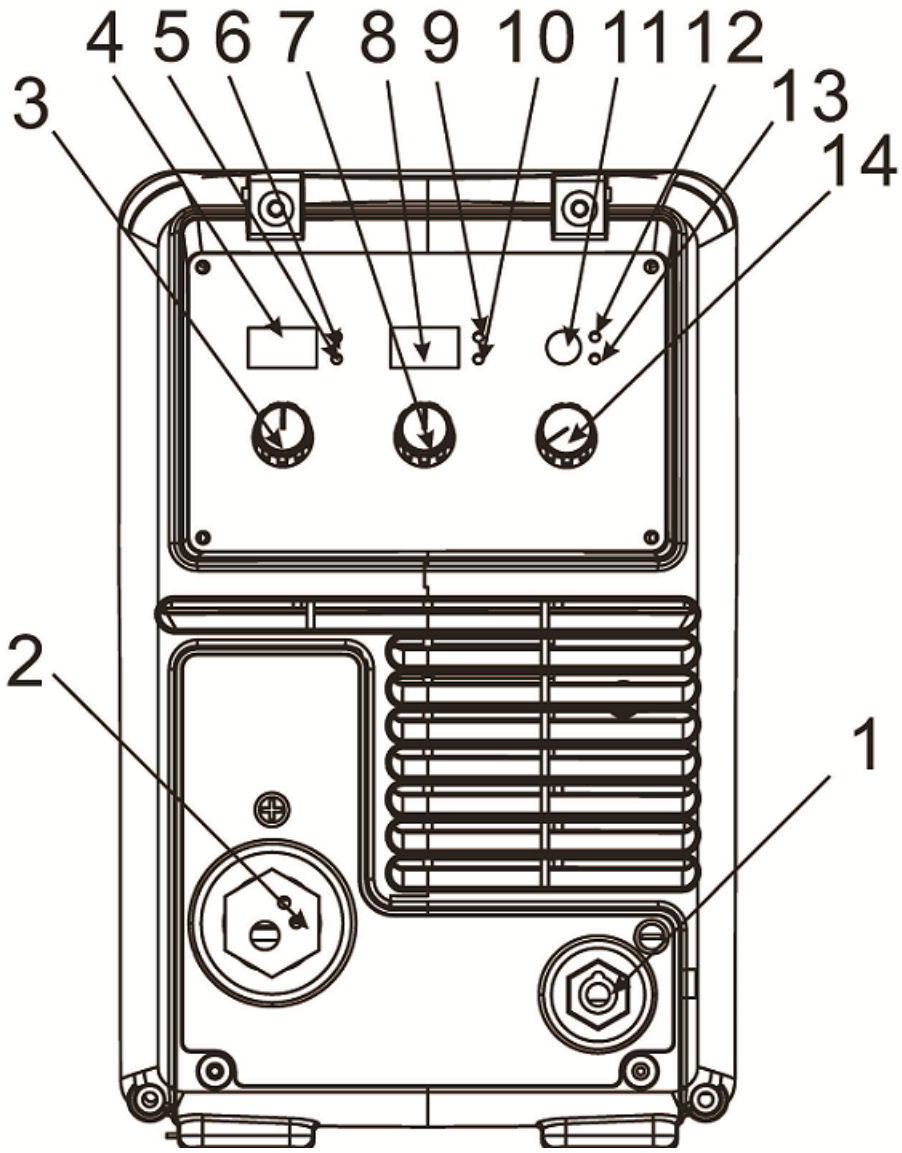

1.**Output cathode：** This polarity must connect the work piece.

2. MIG GUN Connect.

3. **Welding voltage knob:** Set the welding volt.

4. **Voltage display:** Welding voltage display when machine is working, Set voltage

display when MIG mode before welding. Unit：V.

5. **Alarm Led:** When the welder is over voltage, less voltage, over current or over heated, the alarm pilot lamp will be on.

6. **Power Led:** Power led is lighted when open the machine.

7. **Welding current knob:** Set the welding current.

8. **Current display:** Welding Current display when machine is working, Set current display before welding. Unit：A.

9. **Wire speed LED：** You can use current setting knob to set the wire speed when the wire speed LED is on.

10. **Current LED：** When the current LED is on, it display the actual output welding current.

11. **2T/4T welding mode key：** Pressing the key can choose 2T or 4T welding mode.

12. **2T welding mode LED:** When the 2T welding mode LED is on ,it can 2T welding mode,2T is suitable for the short welding.

13. **4T welding mode LED:** When the 4T welding mode LED is on ,it can 4T welding mode, 4T is suitable for the long welding.

14. Wave control knob: Controls arc characteristics, Determines the rate at which the amperage rises when a short circuit is produced.

§4.2 Welding operation

For example MIG200

§4.2.1 Voltage Setting

You can use the voltage setting knob to set the output voltage before welding.

§4.2.2 Wire speed setting

You can use current setting knob to set the wire speed when the wire speed LED is on. When the current LED is on, it display the actual output welding current.

§4.3 Welding parameters

Welding current（A）	Welding volt（V）	Wave control	Wire speed		
			Φ0.6	Φ0.8	Φ1.0
40A	13～15V	1-2	2--3		
60A	14～16V	2-4	3--5	2--3	
80A	15～17V	3-5	6--8	3--5	2--3
100A	16～19V	3-5	8--10	3--6	2-3
120A	17～20V	4-6		4--7	3--5
140A	19～21V	5-10		5--8	3--5
160A	20～22V	5-10		6--9	4--7
180A	21～23V	5-10			6--9
200A	22～24V	5-10			8--12

§4.4 Operation environment

▲ Height above sea level ≤1000 M

▲ Operation temperature range -10～+40℃.

▲ Air relative humidity is below 90 %(20℃).

▲ Preferable site the machine some angles above the floor level, the maximum angle does not exceed 15℃.

▲ Protect the machine against heavy rain or in hot circumstance against direct sunshine.

▲ The content of dust, acid, corrosive gas in the surrounding air or substance can not exceed

normal standard.

▲ Take care that there is sufficient ventilation during welding. There is at least 30cm free distance between the machine and wall.

§4.5 Operation Notices

▲ Read §1 carefully before attempting to use this equipment.

▲Connect the ground wire with the machine directly and refer to §3.5.

▲ Ensure that the input is single-phase 50/60Hz,220V±10%

▲Before operation, no concerned people should be left. Do not watch the arc in unprotected eyes.

▲ Ensure good ventilation of the machine to improve duty ratio.

▲ Turn off the engine when the operation finished for economize energy sources.

▲When power switch shuts off protectively because of failure. Don’t restart it until problem is resolved. Otherwise, the range of problem will be extended.

▲In case of problems, contact your local dealer if no our authorized maintenance man.

§5 Maintenance & Troubleshooting

§5.1 Maintenance

In order to guarantee that arc welding machine works high-efficiently and in safety, it must be maintained regularly. Let customers understand the maintenance methods and means of arc welding machine more , enable customers to carry on simple examination and safeguarding by oneself, try one's best to reduce the fault rate and repair times of arc welding machine, so as to lengthen service life of arc welding machine .Maintenance items in detail are in the following table.

● **Warning: For safety while maintaining the machine, please shut off the supply power and wait for 5 minutes, until capacity voltage already drop to safe voltage 36V.**

Date	Maintenance items
Daily examination	Observe that whether panel knob and switch in the front and at the back of arc welding machine are flexible and put correctly in place. If the knob has not been put correctly in place, please correct; If you can't correct or fix the knob , please replace immediately; If the switch is not flexible or it can't be put correctly in place, please replace immediately; Please get in touch with maintenance service department if there are no accessories. After turn-on power, watch/listen to that whether the arc welding machine has shaking, whistle calling or peculiar smell. If there is one of the above problems, find out the reason to get rid of; if you can't find out the reason, Please contact local this area agent or the branch company. Observe that whether the display value of LED is intact. If the display number is not intact, please replace the damaged LED. If it still doesn’t work, please maintain or replace the display PCB. Observe that whether the min/max value on LED accords with the set value. If there is any difference and it has affected the normal welding craft, please adjust it. Check up that Whether fan is damaged and is normal to rotate or control. If the fan is damaged, please change immediately. If the fan does not rotate after the arc welding machine is overheated , observe that whether there is something blocked in the blade, if it is blocked, please get rid of ; If the fan does not rotate after getting rid of the above problems, you can poke the blade by the rotation direction of fan. If the fan rotates normally, the start capacity should be replaced; If not, change the fan. Observe that whether the fast connector is loose or overheated. if the arc welding machine has the above problems, it should be fastened or changed. Observe that Whether the current output cable is damaged. If it is damaged, it should be wrapped up, insulated or changed.

Monthly examination	Using the dry compressed air to clear the inside of arc welding machine. Especially for clearing up the dusts on radiator, main voltage transformer, inductance, IGBT module, the fast recover diode and PCB, etc. Check up the bolt in arc welding machine, if it is loose, please screw down it. If it is skid, please replace. If it is rusty, please erase rust on bolt to ensure it works well.
Quarter-yearly examination	Whether the actual current accords with the displaying value. If they did not accord, they should be regulated. The actual current value can be measured by the adjusted plier-type ampere meter.
Yearly examination	Measure the insulating impedance among the main circuit, PCB and case, if it below 1MΩ, insulation is thought to be damaged and need to change , and need to change or strengthen insulation.

§5.2 Troubleshooting

- Before arc welding machines are dispatched from the factory, they have already been debugged accurately. So forbid anyone who is not authorized by our company to do any change to the equipment!
- Maintenance course must be operated carefully. If any wire becomes flexible or is misplaced, it maybe potential danger to user!
- Only professional maintenance personal who is authorized by our company could overhaul the machine!
- Guarantee to shut off the arc welding machine's power before turn on the outline of the equipment!
- If there is any problem and has no the authorized professional maintenance personal of our company, please contact our local agent or the branch company!

If there are some simple troubles of MIG SERIES welding machine, you can consult the following Chart:

NO.	Troubles		Reasons	Solution
1	Close the breaker, but the power light isn't on		Breaker damaged	Change it
			Fuse damaged	Change it
			Power damaged	Change it
2	After welding machine is over-heat, the fan doesn't work		Fan damaged	Change it
			The cable is loosen	Screw the cable tightly
3	Press the gun switch, no output shielded gas	No output gas when test gas	No gas in the gas cylinder	Change it
			Gas pipe leaks gas	Change it
			Electromagnetic valve damaged	Change it
		Output gas when test gas	Control switch damaged	Repair the switch
			Control circuit damaged	Check the board
4	Wire-feeder doesn't work	Wire reel doesn't work	Motor damaged	Check and change it
			Control circuit damaged	Check the board
		Wire reel works	The press wheel is loosen or weld wire skids	Press it tightly again
			The wheel doesn't fit with the diameter of weld wire	Change the wheel
			Wire reel damaged	Change it
			Wire feed pipe is jammed	Repair or change it
			Tip is jammed because of splash	Repair or change it
5	No striking arc and no output voltage		Output cable is connected mistakenly, or loosen	Screw it down or change it
			Control circuit damaged	Check the circuit
6	Welding stops, and alarm light is on		Machine has self-protection	Check over-voltage, over-current, over-temperature, lower-voltage and over-temperature, and solve it
7	Welding current is run away and can be not controlled		The potentiometer damaged	Check or change it
			The control circuit damaged	Check the circuit
8	The crater current can be not adjusted		The PCB damaged	Check it
9	No post-gas		The PCB damaged	Check it

§5.3 Electrical schematic drawing (PoWerPlus MIG 200)

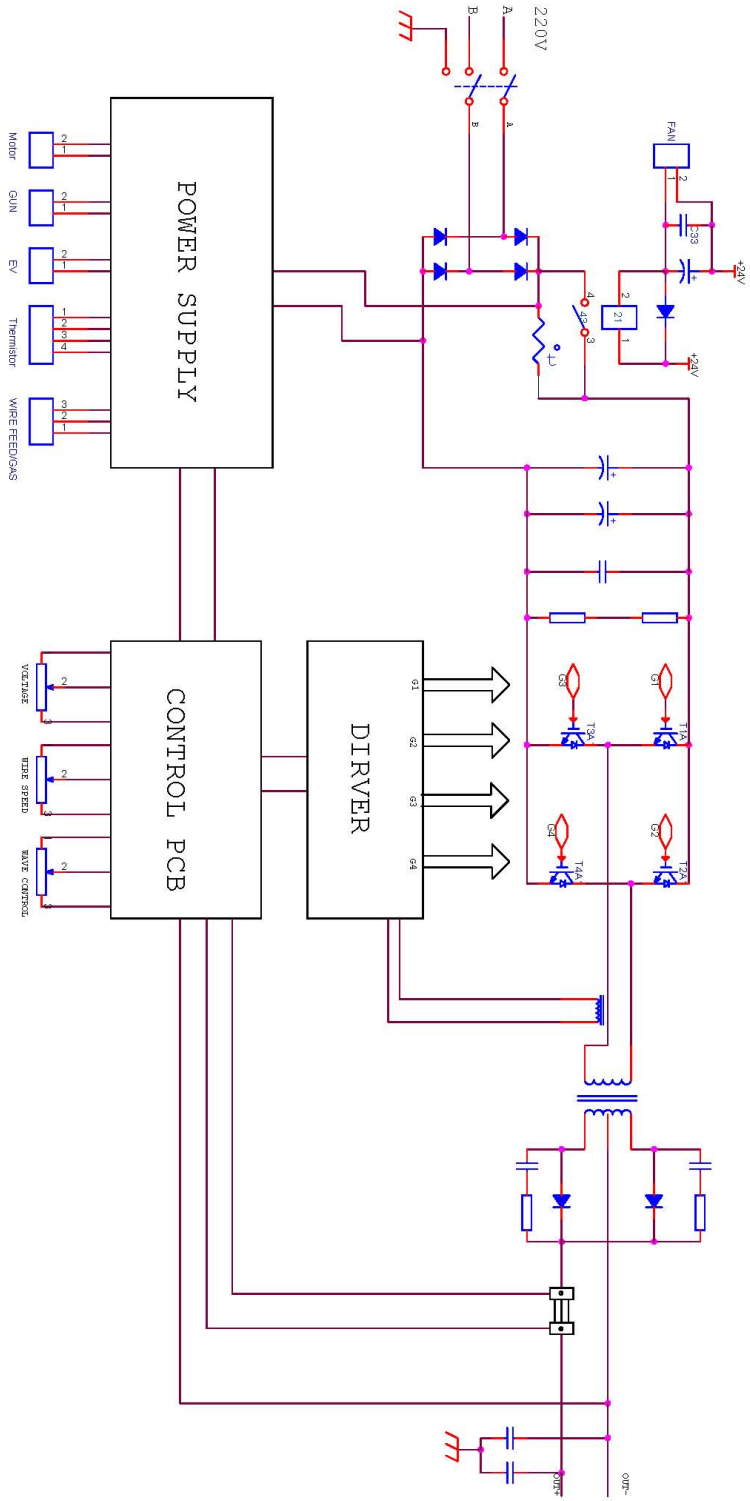

Manufacturer:
Company Name: Shanghai HI-ZONE Welding Equipment Manufacture Co.,Ltd.
Company address: A-2nd Floor, No.99-3, Shenmei Road, Zhoupu, Pudong, Shanghai 201318 China
Contact Details: T: +86 21 31295500 | F: +86 21 51919711

Importer:
Gedik Kaynak San ve Tic A.Ş
Company Address: Ankara Cad No: 306 Seyhli 34906 Pendik, Istanbul
TURKEY
Contact Details: +90 216 3785000

PoWer MIG Series

GeKaMac®

Gedik Welding Inc.
Ankara Caddesi No: 306 Şeyhli 34906 Pendik - İstanbul / Turkey
P. +90 216 378 50 00 • **F.** +90 216 378 20 44
www.gedikwelding.com